VIEW FULL GALLERY >

La Bonita 1000 cojiendo: fotos gratis de Lorena Gómez

Photo Gallery

Video not displayed
This video has been removed in response to a report from the copyright holder.

LA Bonita thatonegirlmel X.



СРОК ДО 02.2025Golden Cocoon Cream функциональный крем для л

Media not displayed
This image has been removed in response to a report from the copyright holder.

Videos - Madonna: La Isla Bonita (Music Video) (1987) .

Media not displayed
This image has been removed in response to a report from the copyright holder.

La Isla Bonita.

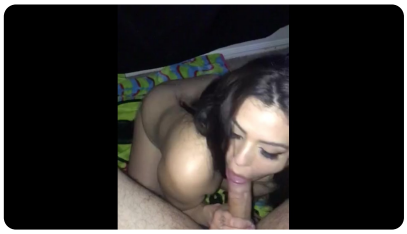

Купить женский спортивный топ бразильского бренда Бонита Bon



"La isla bonita" - image created in Shedevrum.



Picture 4 of 8. Labonita Golden Cocoon Ampoule The Special 1



By. https://casual-shop.in.ua/contact-us.

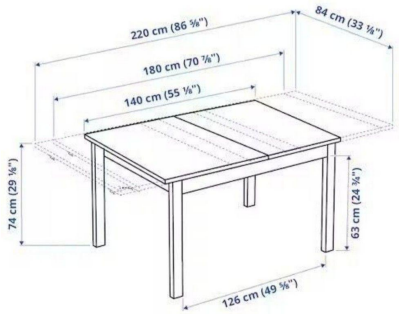

IKEA Dining Table Dimensions: A Roundup

About This Collection

Lorena Gómez abre la galería con un top lavanda y el brillo de Golden Cocoon, mientras La Bonita reúne a juju novinha, thatonegirlmel y Vanessa Bell en una sesión de fruta bonita, perfume Bonita La Rose y ritmos de Dj Samir con MC Locked. Cala Bonita suena de fondo, como La Isla Bonita, y Adalya La Bonita marca el ambiente entre risas y ropa que se queda a medias. Son ocho imágenes de acción directa, piel y complicidad. Entra al enlace de arriba para ver la galería completa.

See the full gallery: View Full Gallery Online

Source: Read the original article on graffitiworld.tv

Related:

- https://paper.wf/annawolf88log/robbie-truboy-model-gallery-photographs-featuring-handsome-young-men
- Vale Torres Nude Photo Gallery with Met Art and Teen Pictures
- Hailey Deegan Leak Nude Photos 2023 Scandal Planet
- Шаг за шагом: проверка палиндрома
- Nick Pulos and Damien Grey Gay Bareback Porn Gallery
- emileexo onlyfans
- Zoe Alone at Home Leak - Watch Exclusive OnlyFans Video
- https://paper.wf/ninaklein95log/nonton-video-bokep-indo-viral
- Genz3x Com | Free Hardcore Porn Videos and Threesome Sex
- Частые ошибки при решении: сортировка пузырьком
- kapella free fire rule 34
- Silkc-251 adult photo gallery with Cyndi Sinclair and Cory Chase
- Jusigris Nudes: OnlyFans Leaks and Nude Photo Gallery
- Засветы в огороде: зрелая дачница мастурбирует на даче
- indian nude dress change
- DizzyDills Adult Comics Collection: Taken For A Ride and More
- little-nalla-sf
- Типичные ошибки при решении: быстрая сортировка
- av4us.videos - AV Porn Gallery with HD Videos and Photos
- sana bl animation
- man in glasses takes advantage
- Решаем и тестируем: числа Фибоначчи
- sana bl animation